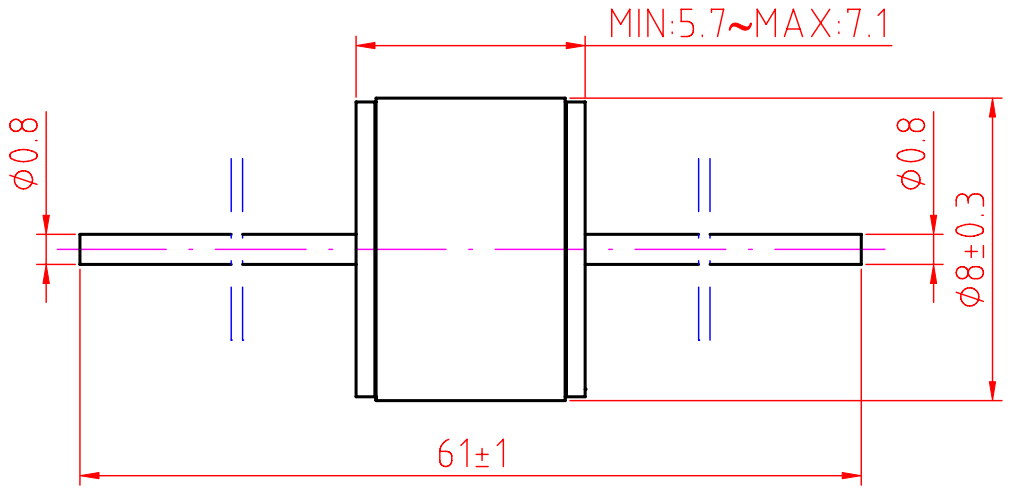


Scale: 5:1

| | | | | | | | | |
|---|---|---|---|---|---|---|---|---|
| CITEL 2cp | BB S/BH S8/BBS HF | | | | | | | |
| 92441<br>12 Boulevard Des Iles<br>Issy Les Moulineaux<br>Cedex France | Code | | Plan No: | SCOE.01.0002 | A | | | |
| | Quantity | | Material | | Replaces | CO.8807 B | | |
| | Tolerance | | | | | | | |
| | Design | Date | Draw | Date | Check | Date | Approve | Date |
| Tel:(33) 01 41 23 50 23<br>Fax:(33) 01 41 23 50 09<br>E-mail:issy@citel2cp.com | | / / | | / / | | / / | | / / |